org is an online platform, collecting, describing, presenting and generating documents of all sorts. It documents documents.

Your path through the collection lead along A DONNER, Garage Paul > Garage Robert (collection of 2023), Negative sheet 16, negative 24, negative 24,5, The Saddle of a Sparta K-10, Rue Verte, Brussels, Weight Bench, Swarms, Green or blue, Learning broom-making again, A New Sparta K-10, Seacat, Neptune in opposition [1/20] – Approach, Vérandah, The Authenticity in the woods of the Bosque Protector de Arraiján, Roofing (2), YAY HOORAY, Battery

What constitutes a 'document' and how does it function?

According to the *Oxford English Dictionary*, the etymological origin is the Latin 'documentum', meaning 'lesson, proof, instance, specimen'. As a verb, it is 'to prove or support (something) by documentary evidence', and 'to provide with documents'. The online version of the *OED* includes a draft addition, whereby a document (as a noun) is 'a collection of data in digital form that is considered a single item and typically has a unique filename by which it can be stored, retrieved, or transmitted (as a file, a spreadsheet, or a graphic)'. The current use of the noun 'document' is defined as '*something* written, inscribed, *etc*., which furnishes evidence or information upon any subject, as a manuscript, title-deed, tomb-stone, coin, picture, etc.' (emphasis added).

Both 'something' and that first 'etc.' leave ample room for discussion. A document doubts whether it functions as something unique, or as something reproducible. A passport is a document, but a flyer equally so. Moreover, there is a circular reasoning: to document is 'to provide with documents'. Defining (the functioning of) a document most likely involves ideas of communication, information, evidence, inscriptions, and implies notions of objectivity and neutrality – but the document is neither reducible to one of them, nor is it equal to their sum. It is hard to pinpoint it, as it disperses into and is affected by other fields: it is intrinsically tied to the history of media and to important currents in literature, photography and art; it is linked to epistemic and power structures. However ubiquitous it is, as an often tangible thing in our environment, and as a concept, a document *deranges*.

the-documents.org continuously gathers documents and provides them with a short textual description, explanation, or digression, written by multiple authors. In *Paper Knowledge*, Lisa Gitelman paraphrases 'documentalist' Suzanne Briet, stating that 'an antelope running wild would not be a document, but an antelope taken into a zoo would be one, presumably because it would then be framed – or reframed – as an example, specimen, or instance'.
The gathered files are all documents – if they weren't before publication, they now are. That is what the-documents.org, irreversibly, *does*. It is a zoo turning an antelope into an 'antelope'.

As you made your way through the collection, the-documents.org tracked the entries you viewed. It documented your path through the website. As such, the time spent on the-documents.org turned into this – a new document.

This document was compiled by ____ on 09.05.2024 19:13, printed on ____ and contains 16 documents on 34 pages. (https://the-documents.org/log/09-05-2024-6057/)

the-documents.org is a project created and edited by De Cleene De Cleene; design & development by atelier Haegeman Temmerman.

the-documents.org has been online since 23.05.2021.

Notes

- De Cleene De Cleene is Michiel De Cleene and Arnout De Cleene. Together they form a research group that focusses on novel ways of approaching the everyday, by artistic means and from a cultural and critical perspective.
  www.decleenedecleene.be / info@decleenedecleene.be
- This project was made possible with the support of the Flemish Government and KASK & Conservatorium, the school of arts of HOGENT and Howest. It is part of the research project *Documenting Objects*, financed by the HOGENT Arts Research Fund.

Sources

- Briet, S. *Qu'est-ce que la documentation?* Paris: Edit, 1951.
- Gitelman, L. *Paper Knowledge. Toward a Media History of Documents.* Durham/ London: Duke University Press, 2014.
- *Oxford English Dictionary Online*. Accessed on 13.05.2021.



A snow-covered stainless steel and glass shelf has a note, written in red marker, cello-taped to one of the steel supports: ‘A DONNER’.

Now a park, the Place Marie Janson – colloquially called *Carré Moscou* or *Carré Monnaies* – used to house *L’Hôtel des Monnaies/het Munthof*. For a century, the coins of some twenty-two countries were minted in this building.

Sources

- hotel_monnaies_nl.pdf

A DONNER



type	date	filename	size	author
photograph	03.04.2024	_44A8275.dng	52,46 MB	Michiel De Cleene

category
card, decoration, dusk, precipitation, sign, waste

18:57:58

A year ago I moved into Solange’s appartement. From the balcony, I see half the parking lot and the adjacent high rise. On the mailbox, I haven’t replaced her name for mine.

1. GARAGE PAUL, (+32) 0489. 764 540 / recto-verso NL/FR
2. CASH 24, (+32) 0466 15 32 16 / recto-verso NL/FR
3. GARAGE NADIM (+32) 0470 606 474 / recto-verso NL (1)
4. GARAGE NADIM (+32) 0470 606 474 / recto-verso FR (2)
5. GARAGE GABRIEL (+32) 0489 76 45 40 / recto-verso NL (1)
6. GARAGE GABRIEL (+32) 0489 76 45 40 / recto-verso FR (2)
7. MAGNUM’s (+32) 0492 92 70 70 / recto-verso FR
8. GARAGE ROBERT (+32) 0492 92 70 70 / recto-verso FR (1)
9. GARAGE ROBERT (+32) 0492 92 70 70 / recto-verso FR (2)

I don’t know whether Solange owned a car.

Notes



- Bieke Criel, lives and works in Gent (BE). Intrigued by landscape, movement, light and the poetics of what lies in between. Does not own a car, loves to drive one. Part of 019.

Garage Paul > Garage Robert (collection of 2023)



type	date	filename	size	author
scan	17.01.2024	biekecriel_scan_6MB_jpeg_Doc.1_.jpg	6 MB	Bieke Criel

category
archive, automobile, card, collecting

18:58:12

‘Meunerie Duyckers & Conors, les nouveaux moulins’, better known as ‘De Nieuwe Molens’, is a flour mill established in 1897 in the north of Gent along the Verbindingskanaal. Due to increased production, the original 1897 building doubled in 1904.

Only the facade of the iconic warehouse has been preserved along with the recently renovated gasometers. The building is now part of the Tondeliersite. It has been converted into lofts and flats, and was extended with a new construction.

Sources

- https://inventaris.onroerenderfgoed.be/erfgoedobjecten/18269

Negative sheet 16, negative 24, negative 24,5



type	date	filename	size	author
scan	08.09.2023	016b_16.jpg	1,28 MB	De Cleene De Cleene

category
architecture, archive, economy, panorama

18:58:13

How slanted is this saddle? Anyone looking at the full photo of this Sparta K-10 might think that the street fence is pushing its saddle down at an angle. However, the bike and its saddle are leaning against the fence, they are not pushed under it. Whether the saddle is as slanted as the photo suggests, we are not sure. This detail of the photo suggests otherwise. The rail to which the saddle is attached is already mounted slightly less slanted than the line of the fence behind which the saddle is partly hidden, and above that part of the fence something vaguely protrudes from the back of the saddle. Presumably that is the edge of the saddle, which would reassure us about the cyclist’s comfort.

Notes

- Lars Kwakkenbos lives and works in Brussels and Ghent (B). He teaches at KASK & Conservatorium in Ghent, where he is currently working on the research project ‘On Instructing Photography’ (2023-2024), together with Michiel and Arnout De Cleene.

The Saddle of a Sparta K-10, Rue Verte, Brussels



type	date	filename	size	author
photograph	22.01.2023	Naamloos.jpg	189 KB	Lars Kwakkenbos

category
bicycle

18:58:22

Today I brought an old bedspring, the styrofoam the air-humidifier came in, a few bags of sawdust and some scrap pieces of plywood to the municipal recycling center. As I was waiting to mount the stairs to the scrap metal container, a gray-haired man wearing blue leather shoes, dark jeans and a checkered shirt was tipping – with relative ease – a weight bench over the edge of the container.

the-documents.c

org Weight Bench

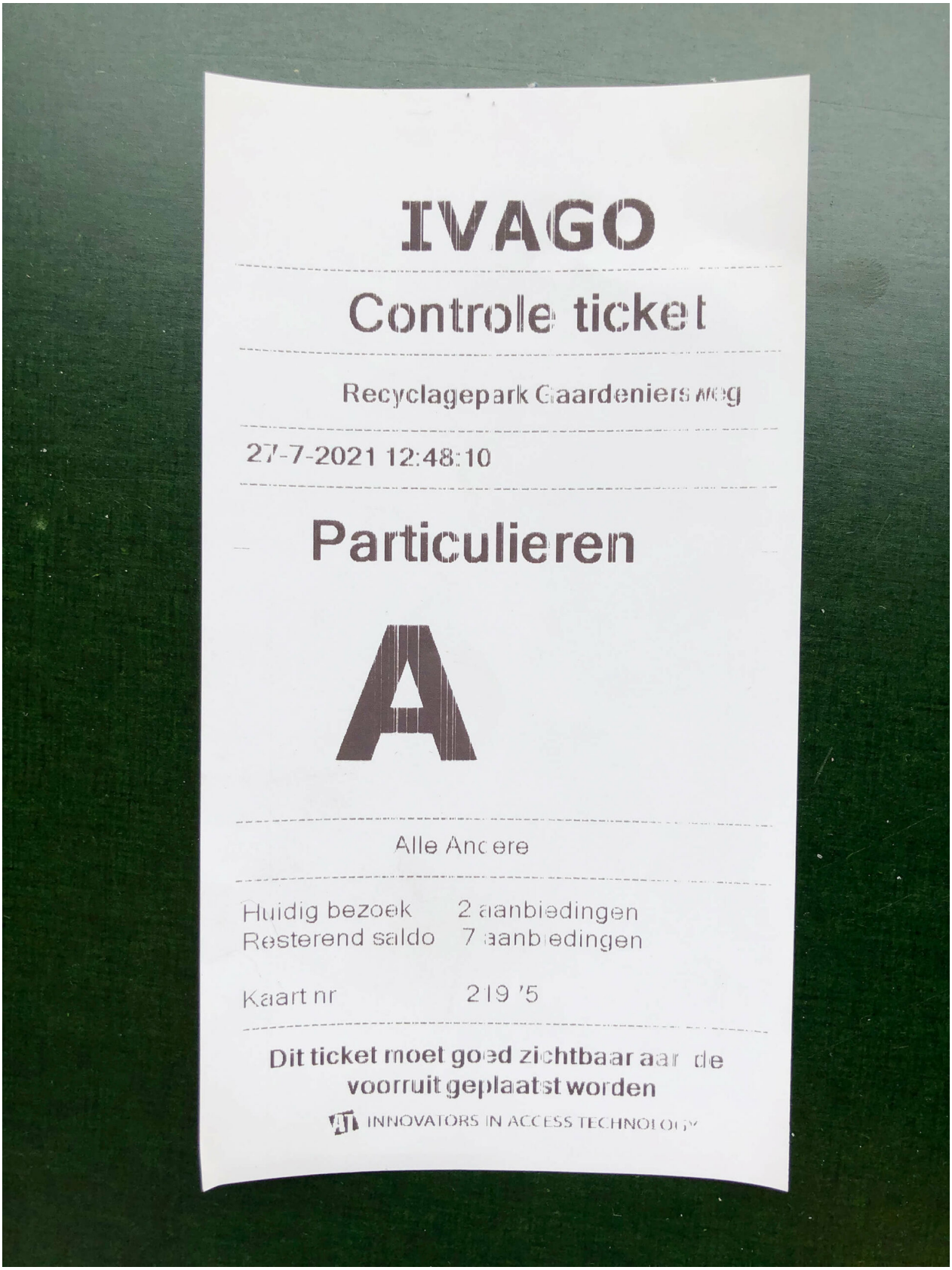

type	date	filename	size	author
photograph	26.07.2021	IMG_7874.HEIC	1,2MB	Michiel De Cleene

category
crash, impact, waste

18:58:23

July. Our eight-month-old son has a fever. We have a hard time getting him to drink enough. The tally marks on the back of a tortellini-box keep track of the diapers he wets and the millilitres of milk and electrolytes he’s able to hold down.
Stuck inside with worrying parents, a sticker-book about a farm is his brother’s favourite pass-time. Tired of having to go back and forth between the pastures and the sticker-filled sheets we decide to use my arm as a repository for animals that share a habitat.



type	date	filename	size	author
photograph	23.01.2024	IMG_6467.jpeg	1,66 MB	Michiel De Cleene

category
collecting, family, hand, sticker

18:58:25

According to @missbluesette, the green K-10 put up for sale by Fred from Zwolle that I came across on marktplaats.nl on 29 September 2022 is not green, but blue. The colour resembles turquoise, I explain, a colour I have always called green. No, turquoise is not green, but blue, she replies. And the texts of my Instagram posts are too long, she says, so she doesn’t read them.

Notes

- Lars Kwakkenbos lives and works in Brussels and Ghent (B). He teaches at KASK & Conservatorium in Ghent, where he is currently working on the research project ‘On Instructing Photography’ (2023-2024), together with Michiel and Arnout De Cleene.

org Green or blue

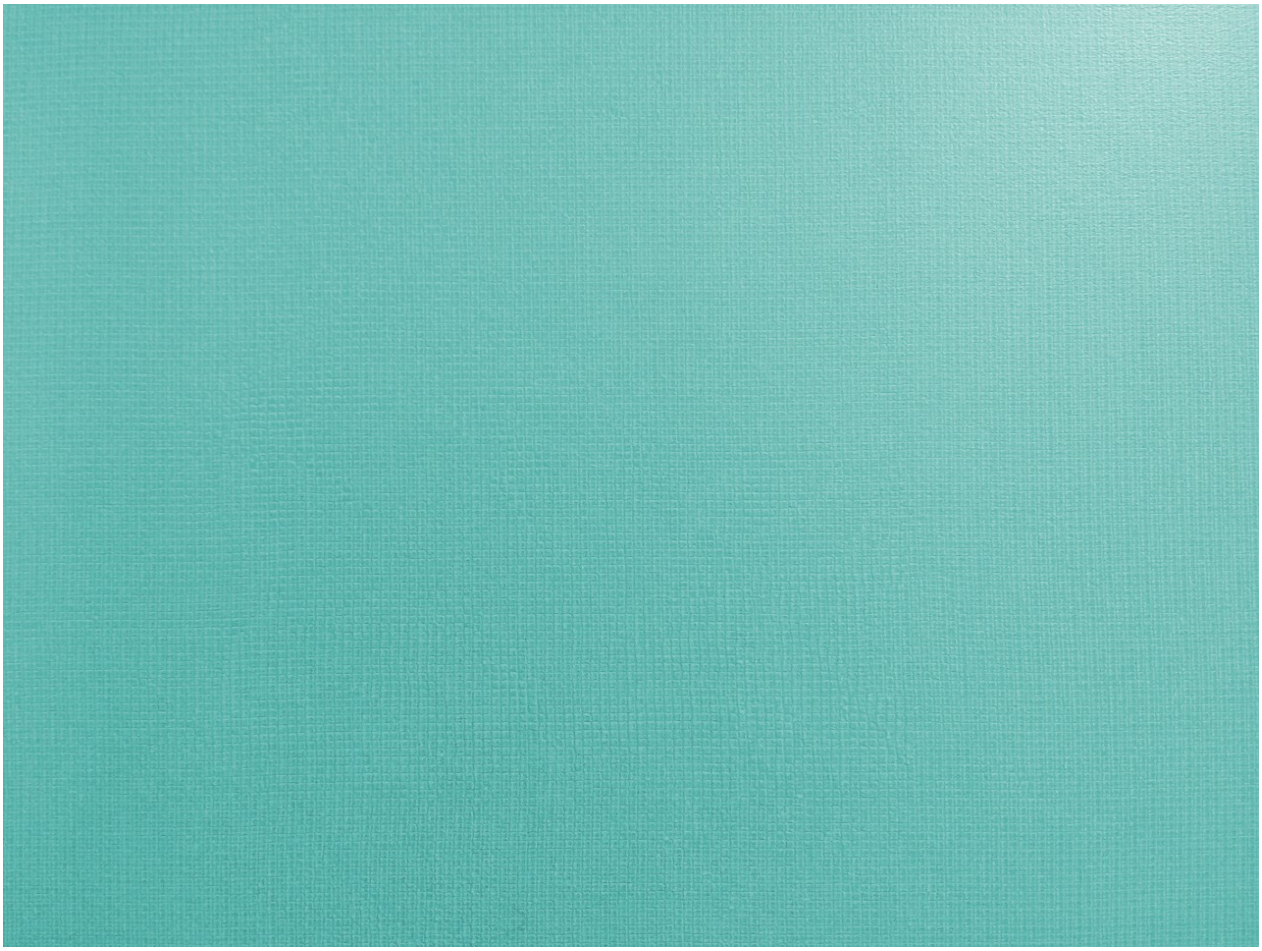

type	date	filename	size	author
image	19.01.2023	teal-turquoise-plastic-with-square-pattern-texture.jpg	308 KB	Lars Kwakkenbos

category
bicycle, encounter, mistake

19:00:07

This video-still is taken from a documentary about ‘Le Coin du Balai – De Bezemhoek’, a Brussels neighborhood on the edge of the Sonian Wood. Historically, the inhabitants had the exclusive right to harvest young shoots of trees to make and sell brooms. In 1976, filmmaker Willy Biesemans captured the last broom-maker, still in possession of this vernacular knowledge.

Nowadays, the Sonian Wood is commonly understood as a place of natural beauty surrounding the city. The wood the forest produces is managed as a chain of production and sold in public auction to the best buyer. The bulk of the forest’s produce is exported abroad and eventually imported back as manufactured goods.

Notes

- Clementine Vaultier’s interests, although trained as a ceramist, are in the warm surroundings of the fire rather than the production it engenders.

Sources

- Biesemans, W. *De Bezemhoek.* 1976 (YouTube – De Bezemhoek)

Learning broom-making again



type	date	filename	size	author
screenshot	16.08.2022	clementine_learning_broommaking_again.png	3 MB	Clémentine Vaultier

category
botany, economy, landscape, tree

19:00:48

On 29 September 2022, I find a picture of a new Sparta K-10 on the website of cyclonewebshop.be. The bike is matt black and has a chaincase and a nice luggage rack at the front. The typical loop at the back is less noticeable in this photo. This is partly due to the colour of the bike.

Notes

- Lars Kwakkenbos lives and works in Brussels and Ghent (B). He teaches at KASK & Conservatorium in Ghent, where he is currently working on the research project ‘On Instructing Photography’ (2023-2024), together with Michiel and Arnout De Cleene.

A New Sparta K-10



type	date	filename	size	author
image	17.01.2023	20200420_141733.webp	141 KB	Lars Kwakkenbos

category
bicycle, economy

19:12:58

Coming back from holidays, we were waiting for the ferry to take us from Ramsgate to Ostend. We were well on time. As the ship entered the harbour, I asked my parents if I could take a photograph. It's the first photograph I recall taking. I remember my dad telling me to wait long enough for the ship to get closer. I didn't. I only got one try.[1]

It took a while before the film was developed. I couldn't stop imagining what the photograph would look like: some picturesque waves in the foreground, the shining white ship, the red and blue text on the side, and a cloud filled sky.

Notes

1 Following every holiday, when we got home, the garden and our house would be photographed with the remaining exposures on the roll of film in the camera.



type	date	filename	size	author
scan	10.11.2022	48b_08.jpg	427 KB	Michiel De Cleene

category
archive, family, landscape, sea

19:13:25

When the Sun, the Earth and one of the outer planets of the Solar System perfectly align, with the Earth positioned in the middle, the outer planet is said to be ‘in opposition’. It’s a moment of planetary approach and of optimal viewing conditions: the Earth and the outer planet are at their closest and brightest.

Notes

- *Neptune in opposition [1-20]* is part of ‘Documenting Objects’, a research project by Arnout De Cleene and Michiel De Cleene at KASK & Conservatorium, the school of arts of HOGENT and Howest. Their research is financed by the HOGENT Arts Research Fund. Previous research into this subject has amongst other things led to the documentary film *Towards Civil Dusk* (2020) and temporary public observatories at 019, Gent and Kunsthal Extra City, Antwerp.

org Neptune in opposition [1/20] – Approach



type	date	filename	size	author
scan	15.09.2022	opp2.jpeg	2,8MB	De Cleene De Cleene

category
astronomy, encounter, map/plan, Neptune, physics

19:13:30

In the archive of the architect O. Clemminck, there is a piece of a plan of a building in a suburb in Gent. It presents the ground floor. There is a kitchen, a salon, an eating place, a meeting place. The missing part would have stated the exact address, the name, and maybe the profession of the owners. The plan of the first floor might have given an indication of the number of (anticipated) family members, based on the number and size of sleeping rooms.

At the southern edge of (the plan of) the lot, O. Clemminck has drawn a laundry room that gives out to a *vérandah*. The spelling of the Dutch word – nowadays written as *veranda* – is remarkable, as is its etymology, which is unclear and a matter of debate among scholars. The word might have Portuguese (*varanda*: railing) and Catalan roots (*baranda*: barrier), maybe also origins in the Lithuanian Žemaitan dialect (*varanda*: loop plaited from flexible wings) and might also be traced back to a Sanskrit root (*varandaka*: rampart separating two fighting elephants).

The *vérandah* O. Clemminck proposes is 2,40 meters by, at least, 2,80 meters.

Vérandah

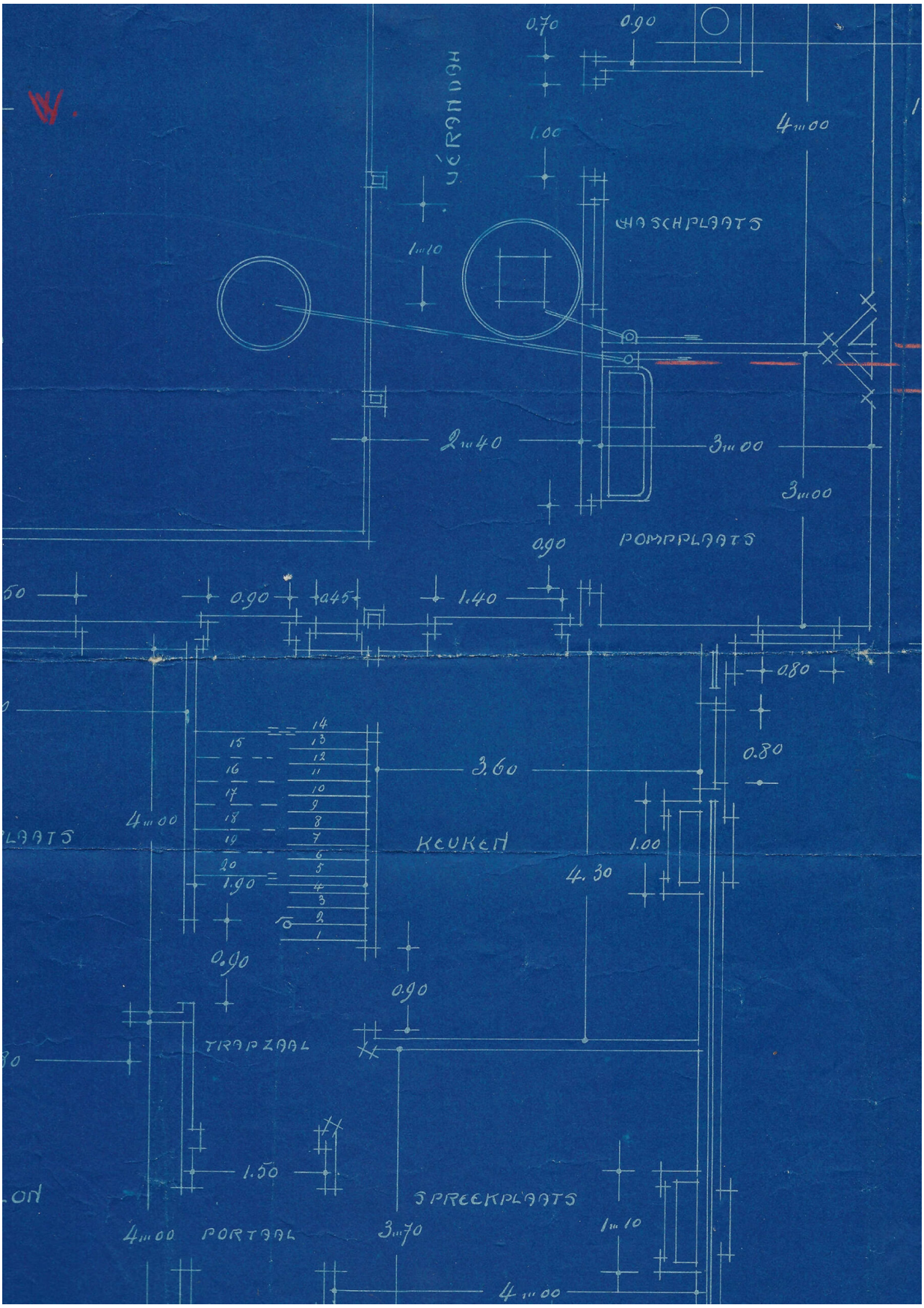

type	date	filename	size	author
scan	28.12.2021	Foto_2021-12-27_194400.pdf	7,2MB	Arnout De Cleene

category
architecture, archive, family, house, map/plan, O. Clemminck

19:13:32

The Authenticity bunkered crude fuel in the Panama Bay. She navigated back and forth between the artificial island Isla Melones and ships leaving or waiting to enter the Panama Canal. On February 14th 2015 she had been moored for a couple of days near the Centennial bridge when the AIS-transponder momentarily signalled the ship's position in the woods of the Bosque Protector de Arraiján. Afterwards no signal of the ship was received for 41 days, until she reappeared near the port of Bahia Las Minas, at the other side of the Panama Canal.

Notes

First published in: De Cleene, M. *Reference Guide*. Amsterdam: Roma Publications, 2019

Sources

Marine Traffic, Authenticity (Caribe Trader, PA), latest position, 09°01'40,71" N 79°38'18,59"W, viewed 14.02.2015, http://www.marinetraffic.com

The Authenticity in the woods of the Bosque Protector de Arraiján

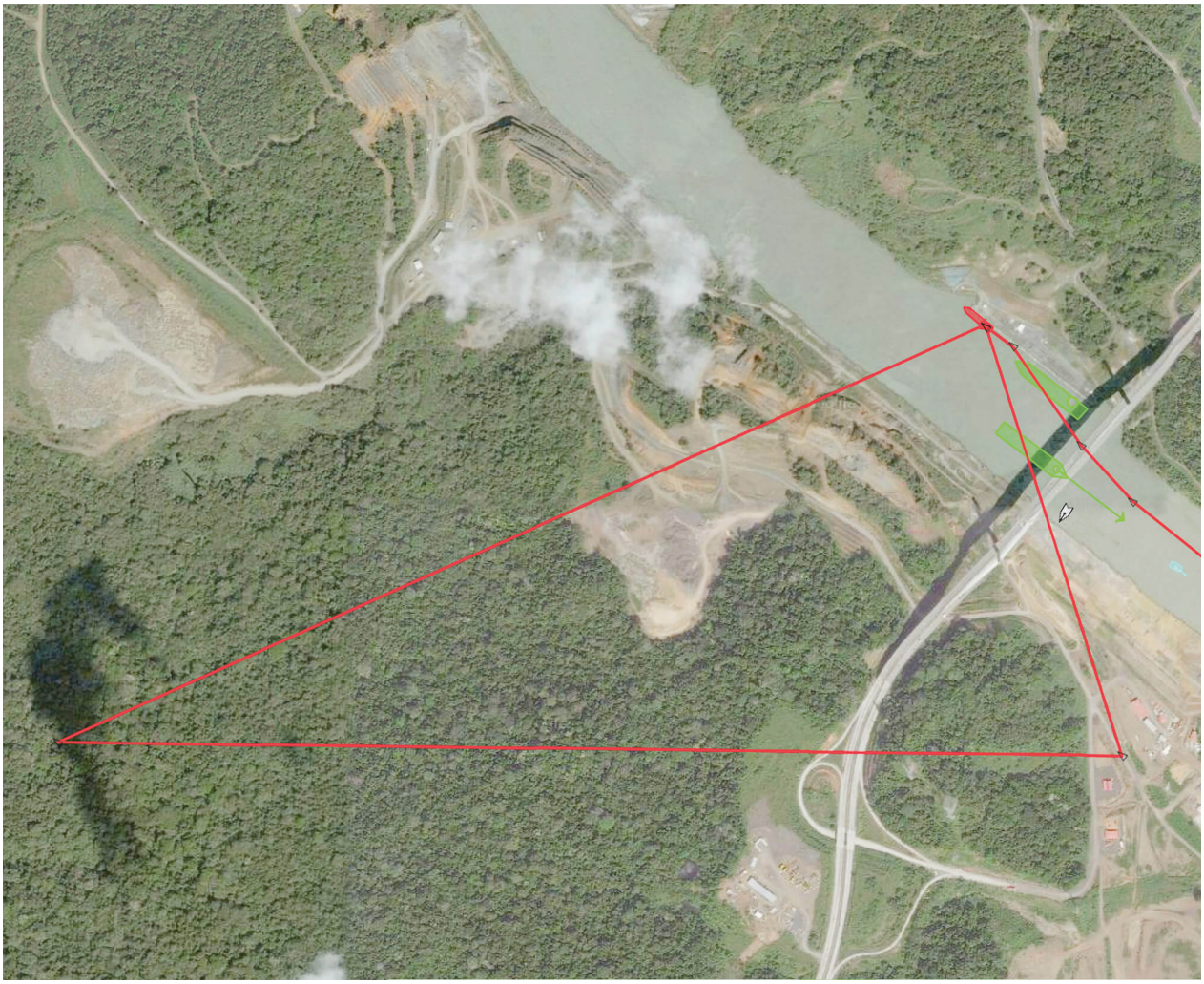

type	date	filename	size	author
screenshot	10.05.2021	caribe.jpg	17,33MB	Michiel De Cleene

category
economy, encyclopaedia, interference, landscape, map/plan, Reference Guide, sea, technology, tree, data storage

19:13:41

Five white boulders close off a shortcut for motorists who attempt to cut the bend in the road. The southernmost roof’s pitch runs opposite to the landscape’s slope. The lower roofline is, therefore, only about one meter above a small, triangular patch of grass which is hidden from view by a hedge. In summer, when the roofing gets hot and soft, text and drawings get pressed or carved into it.

Sources

Google Earth

org Roofing (2)



type	date	filename	size	author
screenshot	14.04.2021	Schermafbeelding 2021-05-05 om 22.37.00.png	16,98MB	Michiel De Cleene

category
automobile, crash, landscape, map/plan, parking, roofing, sign

19:13:42

Depending on the perspective one chooses to look at the address, the house is adorned or not.
The perspective from the main road is an image made in August 2020, the website (Google Maps) says. Our car is in front of the garage. It must be the end of August. We drive home from the hospital with the newborn, who doesn't stop crying. Maybe I tightened the belts in the car seat too much.
Arriving at our house, we see the slogans and decorations friends have hung at our front door.
On the sill of the neighbour's first floor window, there's a brick that must have fallen from the second floor facade.



type	date	filename	size	author
screenshot	31.12.2020	Schermafbeelding 2020-12-31 om 10.50.02.png	8,7MB	Arnout De Cleene

category
automobile, brick, crash, house, map/plan, family

19:13:43

Due to strict regulations during the COVID-19-pandemic, the yearly vehicle inspection had to be scheduled by appointment. Getting ready to drive to the DMV, the car wouldn't start. It had rained heavily, the preceding days. The day before the DMV-appointment, water had come running into the car on pushing the pedals. My socks were wet.

I called the DMV to say I needed to cancel the appointment and make a new one (but that the car, besides not being able to drive, was perfectly fine, vehicle-inspection-wise).

Later that day, we got the engine up and running again, using jumper cables and a second car, so we would be able to drive to meet the midwife the next day.

Sources

Renault Clio. Instructieboekje. 2012. PDF-file

ACCU: storing (4/4)

Starten met starthulpkabels

Sluit de starthulpkabels als volgt aan tussen de twee auto's:

Controleer of de starthulpkabels, verkrijgbaar bij uw merkdealer, dik genoeg zijn en in goede staat verkeren.

Beide accu's moeten dezelfde spanning hebben: 12 volt. De hulpaccu moet minstens de capaciteit (Ampère-uur, Ah) hebben van de ontladen accu.

Let erop dat de auto's elkaar niet raken (kortsluitingsgevaar als u de pluspolen met elkaar verbindt) en dat de ontladen accu goed aangesloten is. Zet het contact af van uw auto.

Laat de motor van de hulpauto met een middelmatig toerental draaien.

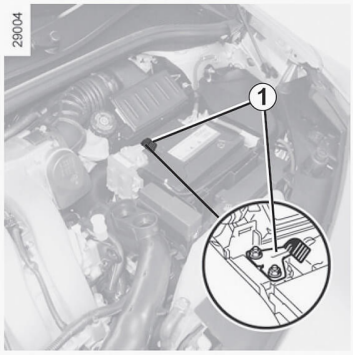

Sluit de positieve kabel ***A*** op de **steun *1*** op de **pluspool *2*** (+) van de ontladen accu aan en daarna op de **pluspool *3*** (+) van de hulpaccu.

Sluit de negatieve kabel ***B*** aan op de **minpool *4*** (–) van de hulpaccu en daarna op de **minpool *5*** (–) van de ontladen accu.

Sluit de kabels A en B uitsluitend aan op de aangegeven aansluitingen.

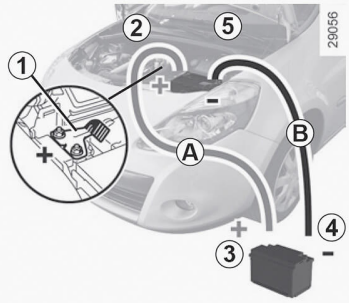

Start de motor op de normale wijze. Maak, zodra hij draait, de kabels ***A*** en ***B*** in omgekeerde volgorde **(*5-4-3-2*)** los.

Controleer of de kabels ***A*** en ***B*** elkaar nergens raken en of de positieve kabel ***A*** geen metalen delen van de hulpauto raakt.

Risico van letsel en/of beschadiging van de auto.

type	date	filename	size	author
screenshot	30.12.2020	Schermafbeelding 2020-12-30 om 20.40.39.png	954KB	Arnout De Cleene

category
automobile, crash, epidemic, precipitation, technology, government

19:13:45