org is an online platform, collecting, describing, presenting and generating documents of all sorts. It documents documents.

Your path through the collection lead along Mould, Straight in the morning, curvy in the afternoon, Vérandah, 12M m3 [7/8] A Fissure, 12M m3 [3/8] Swell, 12M m3 [1/8] Rapid Snowmelt, Cobalt, Flint, At the copyshop, A smoker’s history of energy, The Imaginary Edge of the Roadway, Investment, Potholes, F 6, Slightly Askew (1), Deneef ‘for ever’, Original Copy, Anraum, Shelter, Border, Shoulder, The Events That Took Place in Grimbergen, Battery, Lemon, Adhesive, Mai Ndombe

What constitutes a 'document' and how does it function?

According to the *Oxford English Dictionary*, the etymological origin is the Latin 'documentum', meaning 'lesson, proof, instance, specimen'. As a verb, it is 'to prove or support (something) by documentary evidence', and 'to provide with documents'. The online version of the *OED* includes a draft addition, whereby a document (as a noun) is 'a collection of data in digital form that is considered a single item and typically has a unique filename by which it can be stored, retrieved, or transmitted (as a file, a spreadsheet, or a graphic)'. The current use of the noun 'document' is defined as '*something* written, inscribed, *etc*., which furnishes evidence or information upon any subject, as a manuscript, title-deed, tomb-stone, coin, picture, etc.' (emphasis added).

Both 'something' and that first 'etc.' leave ample room for discussion. A document doubts whether it functions as something unique, or as something reproducible. A passport is a document, but a flyer equally so. Moreover, there is a circular reasoning: to document is 'to provide with documents'. Defining (the functioning of) a document most likely involves ideas of communication, information, evidence, inscriptions, and implies notions of objectivity and neutrality – but the document is neither reducible to one of them, nor is it equal to their sum. It is hard to pinpoint it, as it disperses into and is affected by other fields: it is intrinsically tied to the history of media and to important currents in literature, photography and art; it is linked to epistemic and power structures. However ubiquitous it is, as an often tangible thing in our environment, and as a concept, a document *deranges*.

the-documents.org continuously gathers documents and provides them with a short textual description, explanation, or digression, written by multiple authors. In *Paper Knowledge*, Lisa Gittelman paraphrases 'documentalist' Suzanne Briet, stating that 'an antelope running wild would not be a document, but an antelope taken into a zoo would be one, presumably because it would then be framed – or reframed – as an example, specimen, or instance'.
The gathered files are all documents – if they weren't before publication, they now are. That is what the-documents.org, irreversibly, *does*. It is a zoo turning an antelope into an 'antelope'.

As you made your way through the collection, the-documents.org tracked the entries you viewed. It documented your path through the website. As such, the time spent on the-documents.org turned into this – a new document.

This document was compiled by ____ on 04.02.2022 12:17, printed on ____ and contains 26 documents on 57 pages. (https://the-documents.org/log/04-02-2022-3760/)

the-documents.org is a project created and edited by De Cleene De Cleene; design & development by atelier Haegeman Temmerman.

the-documents.org has been online since 23.05.2021.

Notes

- De Cleene De Cleene is Michiel De Cleene and Arnout De Cleene. Together they form a research group that focusses on novel ways of approaching the everyday, by artistic means and from a cultural and critical perspective.
  www.decleenedecleene.be / info@decleenedecleene.be
- This project was made possible with the support of the Flemish Government and KASK & Conservatorium, the school of arts of HOGENT and Howest. It is part of the research project *Documenting Objects*, financed by the HOGENT Arts Research Fund.

Sources

- Briet, S. *Qu'est-ce que la documentation?* Paris: Edit, 1951.
- Gittelman, L. *Paper Knowledge. Toward a Media History of Documents.* Durham/ London: Duke University Press, 2014.
- *Oxford English Dictionary Online*. Accessed on 13.05.2021.



At a dental practice, the white Alligat®-powder is mixed with the right amount of water to get a mouldable dough that is pressed upon a patient's teeth. After thirty seconds, the Alligat®-dough stiffens and takes on a rubber-like quality. At that point, still white, it must be removed from the patient's mouth. Over the next few hours, the mould turns increasingly pink as the substance becomes less humid. Now, it can be used as a mould to create a positive master cast of the patient's teeth.

Outside the dental practice, the powder's possibilities remain to be fully explored.

Notes

- 

Sources

- First published as part of De Cleene De Cleene. 'Amidst the Fire, I Was Not Burnt', *Trigger (Special issue: Uncertainty)*, 2. FOMU/Fw:Books, 25-30

Mould



type	date	filename	size	author
photograph	27.01.2022	_44A3429.tif	36,81 MB	De Cleene De Cleene

category
manual, medicine, packaging, repair, replica/copy

12:17:15

the-documents.c

On a pile of fresh hospital sheets, near the radiator, the tangerine curtains and the black marble window sill (the window looks out over the parking lot), underneath the two-day-old bouquet of flowers and next to a pile of magazines with a handwritten note on top (about a syrup that relieves slime and tastes like oranges), lie two sheets of paper.

Earlier that day the physiotherapist had come by. Twice. Once in the morning and once in the afternoon. He had each time drawn the first line, as an example. A straight line in the morning, a curvy line in the afternoon.

With a ballpoint pen my grandfather, who is recovering from an accident, diligently copied the examples (31 in the morning, 5 in the afternoon).

Straight in the morning, curvy in the afternoon



type	date	filename	size	author
photograph	09.01.2022	IMG_9441.HEIC	862 KB	Michiel De Cleene

category
family, manual, medicine, parking, replica/copy

12:17:27

In the archive of the architect O. Clemminck, there is a piece of a plan of a building in a suburb in Gent. It presents the ground floor. There is a kitchen, a salon, an eating place, a meeting place. The missing part would have stated the exact address, the name, and maybe the profession of the owners. The plan of the first floor might have given an indication of the number of (anticipated) family members, based on the number and size of sleeping rooms.

At the southern edge of (the plan of) the lot, O. Clemminck has drawn a laundry room that gives out to a *vérandah*. The spelling of the Dutch word – nowadays written as *veranda* – is remarkable, as is its etymology, which is unclear and a matter of debate among scholars. The word might have Portuguese (*varanda*: railing) and Catalan roots (*baranda*: barrier), maybe also origins in the Lithuanian Žemaitan dialect (*varanda*: loop plaited from flexible wings) and might also be traced back to a Sanskrit root (*varandaka*: rampart separating two fighting elephants).

The *vérandah* O. Clemminck proposes is 2,40 meters by, at least, 2,80 meters.

Vérandah

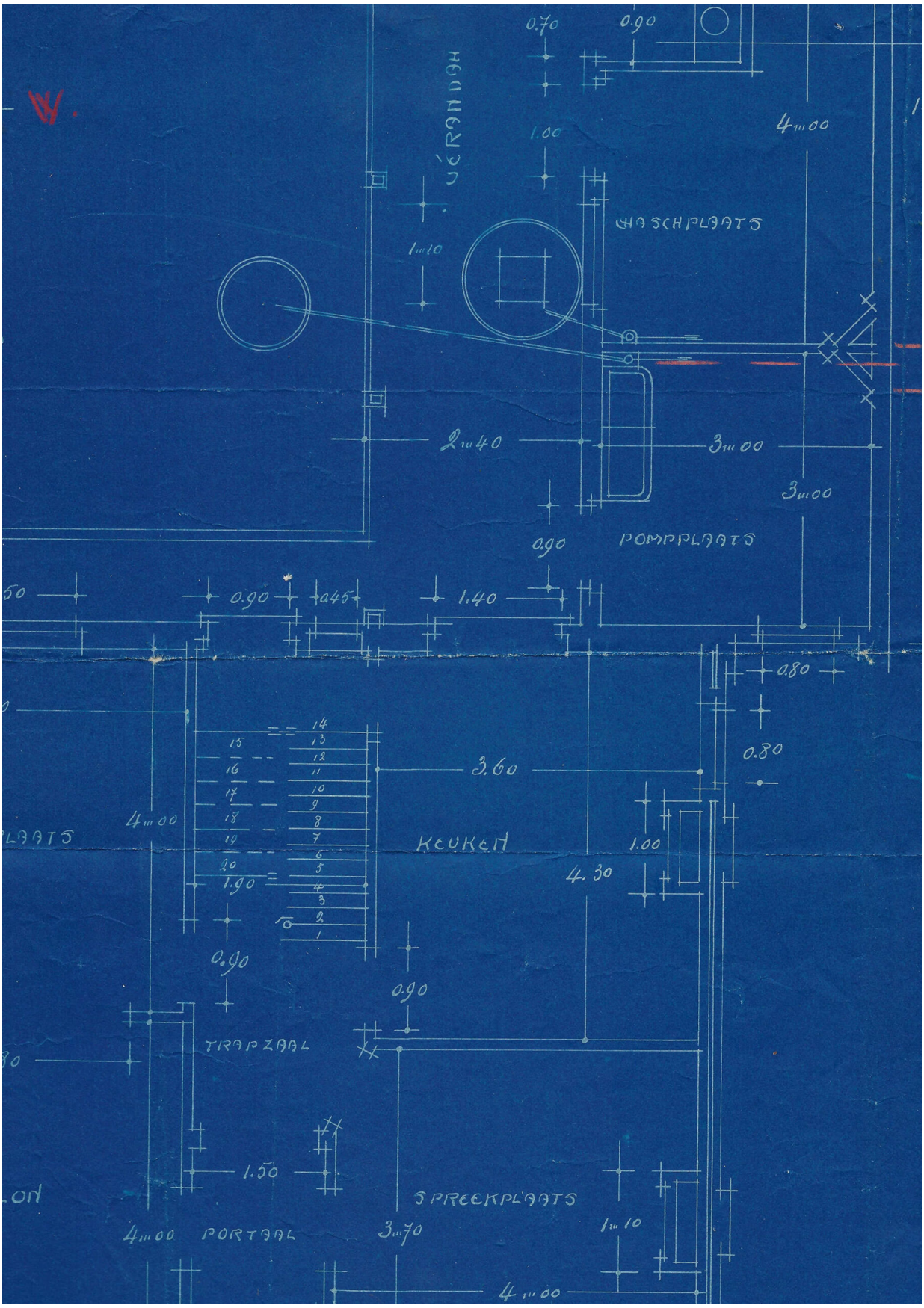

type	date	filename	size	author
scan	28.12.2021	Foto_2021-12-27_194400.pdf	7,2MB	Arnout De Cleene

category
architecture, archive, family, house, map/plan, O. Clemminck

12:17:28

What they took for ice that slid down the dam’s slope, appears to be the reason for draining the reservoir: a fissure in the watertight layer. The dam became unreliable.

the-documents.c

12M m3 [7/8] A Fissure



type	date	filename	size	author
photograph	06.12.2021	IMG_0515b	5,42 MB	Michiel De Cleene

category
fissure, landscape, mistake, repair

12:17:29

The river swells and eventually overflows, causing the death of six people and extensive damage: washed away bridges, damaged homes, submerged factories, destroyed food stocks, heavily eroded roads and paths.

the-documents.c

12M m3 [3/8] Swell



type	date	filename	size	author
photograph	01.12.2021	IMG_0507b.jpg	6,12 MB	Michiel De Cleene

category
impact, landscape, precipitation

12:17:29

December, 1947. Rapid snowmelt coincides with torrential precipitation. At the bottom of the Thur valley, in Wildenstein, the water gathers.

the-documents.c

12M m3 [1/8] Rapid Snowmelt



type	date	filename	size	author
photograph	29.11.2021	IMG_0504b.jpg	8,68 MB	Michiel De Cleene

category
landscape, precipitation

12:17:29

Cathedral glass, or Flemish glass, lets light through, but distorts visibility. It can show something or someone is present behind it, but not in detail. Often used in front doors, it marks the opaque edge between the private and the public sphere, laying bare their presence, without disclosing their contents.

A blue hand, or a spider (*Cyriopagopus lividus*), traces the cracks that testify to the fact that the jammed door had to be closed with force. The hinges need oiling. Cobalt blue tarantulas are said to be extremely defensive.



type	date	filename	size	author
photograph	03.11.2021	_44A6301.dng; _44A6305.dng	47,32MB; 54,99MB	Arnout De Cleene

category
animal, house, impact, insurance, mistake, repair, trompe l'oeil

12:17:29

the-documents.c


147

A cigar box, standing at the back of a shelf next to the heating installation, with in it silex-like stones with what seem to be traces of prehistoric usage.

In the garage, there were papers (the archive of O. Clemminck) and objects (stones, tiles) left to us by a man who had worked at the city archive. He was an acclaimed expert on our village's history.[1]

Notes

1 A recent study by professor Philippe Crombé at Ghent University states that during the last Ice Age, in the region where I grew up, there was once a great lake, with, at the shores, proven presence of prehistoric man. As a kid, we dug up shells with a toothbrush, and set a perimeter with plastic tape. The former presence of a tavern where my parents now live, and the restaurant which still serves seafood at the other side of the road, prevented accurate dating.

Flint



type	date	filename	size	author
photograph	11.10.2021	_MG_7417.JPG	6,5MB	Arnout De Cleene

category
archaeology, animal, collecting, archive, family, house, landscape, mistake, waste

12:17:30

At the copyshop, on a shelf above photocopier 8, the lid of a box of paper serves as the container for ‘forgotten originals’.[1]

Notes

1 The book being copied: Didi-Huberman, G. *La ressemblance par contact . Archéologie, anachronisme et modernité de l’empreinte*. Paris: Les Editions de Minuit, 2008.

At the copyshop



type	date	filename	size	author
photograph	28.09.2021	IMG_0105.JPG	1,8MB	Arnout De Cleene

category
archaeology, book, mistake, replica/copy

12:17:30

A mostly empty book designed to collect cigar bands. The bands are glued to the paper at their left side, so the information on the backside, explaining the image and referring to the series it belongs to and the number of different labels the series contains, can be looked up. The book has complete and incomplete series on Christopher Columbus (complete), tanks (incomplete), the origins of civilization (complete), Ancient cultures (incomplete), fashion (complete), South-American sculptures (complete), Ancient columns (incomplete), Nobel Prize Winners (incomplete), an unclarified series of seven men, most of whom are ‘prof.’ or ‘dr.’(complete / incomplete), design plates (incomplete), famous Belgians (complete / incomplete), statesmen (incomplete) and football players (incomplete). The first page in the book is used to present two series. The left column presents the Egyptian dynasty (incomplete). The middle and right column present a series of bands by the brand Jubilé on the history of energy in telling scenes and pieces of machinery.

Series: Energy

Middle column, top to bottom:

- The writing telegraph. Hughes
- Experiment with a sulphur globe. William Gilbert
- Primitive telephone. Philipp Reis
- Wireless telegraph.[1] Guglielo [sic] Marconi
- The arc of Volta. Sir Humphry Davy
- Fire in the wagon. Thomas Alva Edison
- Experiments with lightning. Benjamin Franklin
- Cathode for creating X-Rays. Wilhelm Röntgen
- Rotating magnetic field. Galileo Ferraris

Right column, top to bottom:

- Electric discharge. William Watt
- Magnetic telephone. Antonio Meucci
- Muscels reacting to electricity. Luigi Galvani
- Voltaic pile. Alessandro Volta
- Oscillating circuit. Guglielo [sic] Marconi
- Development of the telephone. Graham Bell
- Telephone, beginning of the 20th century
- Next to his wireless telegraph. Guglielo [sic] Marconi
- Invention of the incandescent light bulb. Thomas Alva Edison
- Morse’s telegraph. Samuel Morse

The series is incomplete.[2]

Notes

1 The scene shows a man standing at a desk, sticking out his hand to an officer in a window that reads, in mirror writing: Customs.

2 On eBay a complete series is advertised (15 EUR), with a lo-res picture of the whole collection, including the five bands missing in my grandfather’s collection. The information on the back, however, is not given. It leads to a highly speculative history of energy.

- A man in a gown watching a T-shaped object.
- A child in a cellar, sitting on a stool at a table with gray objects.
- A soldier kneeling beside a child, in front of a train, and in front of a boat.
- A low table with a giant cartwheel of sorts and a box.
- A vertical object with what seems to be a bell on top.

A smoker’s history of energy

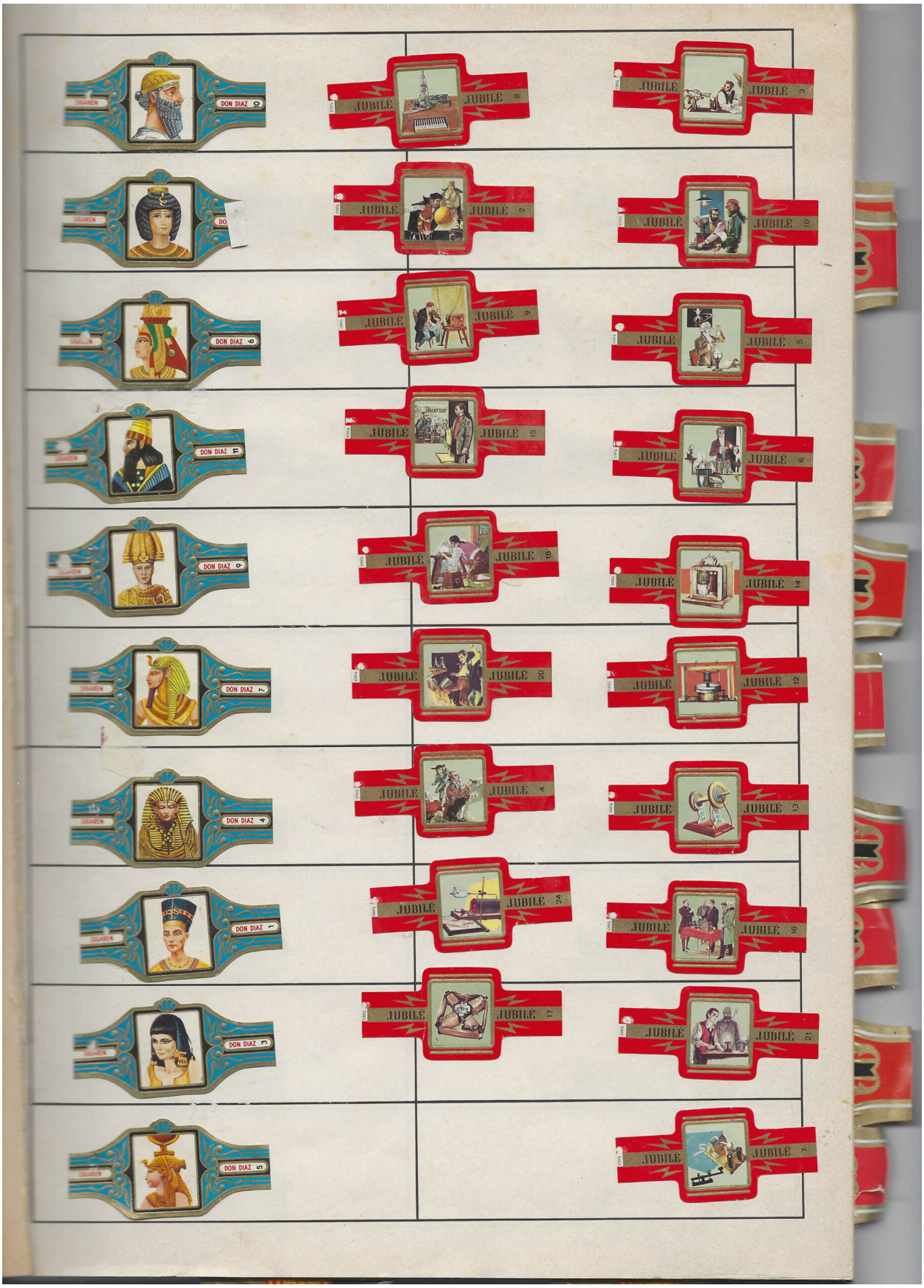

type	date	filename	size	author
scan	18.08.2021	Document_2021-07-23_160752.jpg	10MB	Arnout De Cleene

category
collecting, physics, technology

12:17:31

the-documents.c

Article 75 of the Royal Decree containing general regulations for road traffic and the use of public roads, published in *Het Belgisch Staatsblad* on 9 December 1975, lists the rules for longitudinal markings indicating the edge of the roadway.

According to 75.1, there are two types of markings that indicate the actual edge of the roadway: a white, continuous stripe and a yellow interrupted line. The former is mainly used to make the edge of the roadway more visible; the latter indicates that parking along it is prohibited.

In 75.2, the decree focuses on markings that indicate the imaginary edge of the roadway. Only a broad, white, continuous stripe is permitted for this purpose. The part of the public road on the other side of this line is reserved for standing still and parking, except on motorways and expressways.

Sources

https://wegcode.be/wetteksten/secties/kb/wegcode/262-art75

The Imaginary Edge of the Roadway

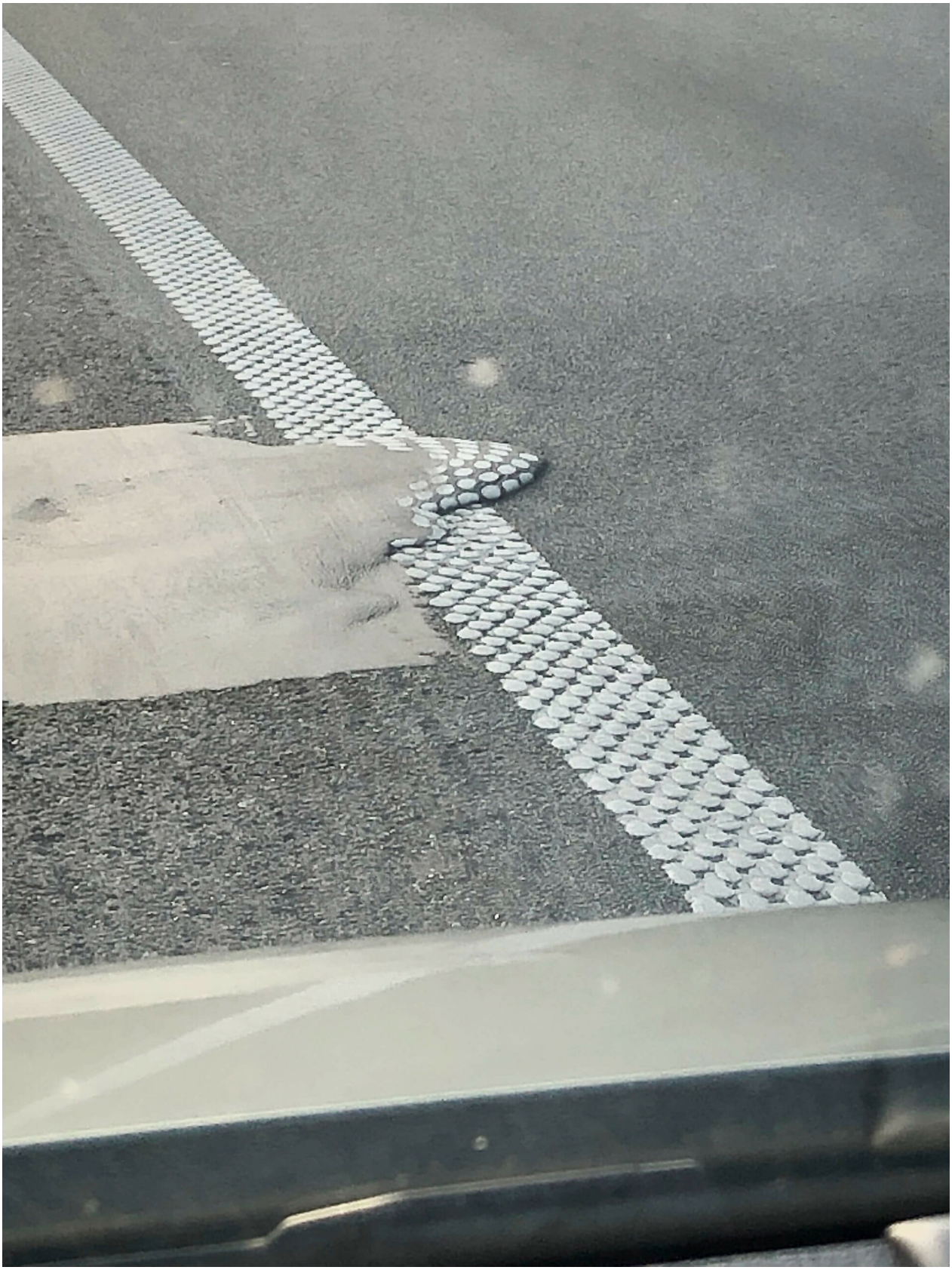

type	date	filename	size	author
photograph	08.08.2021	IMG_7943.HEIC	659 KB	Michiel De Cleene

category
automobile, government, parking, repair, sign

12:17:31

The oldest coin in the collection has darkened over time, but upon inspection, the text ‘AD USUM BELGII AUSTR’ (left) and the contours of a (female) head (right) can be discerned. A quick search learns it stems from the middle of the 18th century. The coin was made and used in the Austrian Netherlands, reigned by Maria Theresa, who is the one depicted. My mother recollects finding it in the backyard when she was a kid.

About 40 years later, the euro was introduced. The ringbinder with my mother’s coin collection was taken from the shelf. A dilemma came to the fore: we wondered if we should keep one of each existing Belgian coin and banknote and put them in the binder, alongside Maria Theresa, or if we should exchange them for the new European currency. The decision to keep a coin of five Belgian francs was not difficult to make, but as the amount raised, the answer was increasingly hard to give. This was an assessment of the old currency’s emotional and projected historical value, compared to its current financial worth. It was a decision based on investment principles.

To accentuate the value of the Maria Teresa kronenthaler of 1 liard, I put the coin on a pile of red post-it-notes when photographing it. Coins like these are sold on eBay for prices ranging from 0,70 euros to 16 euros.

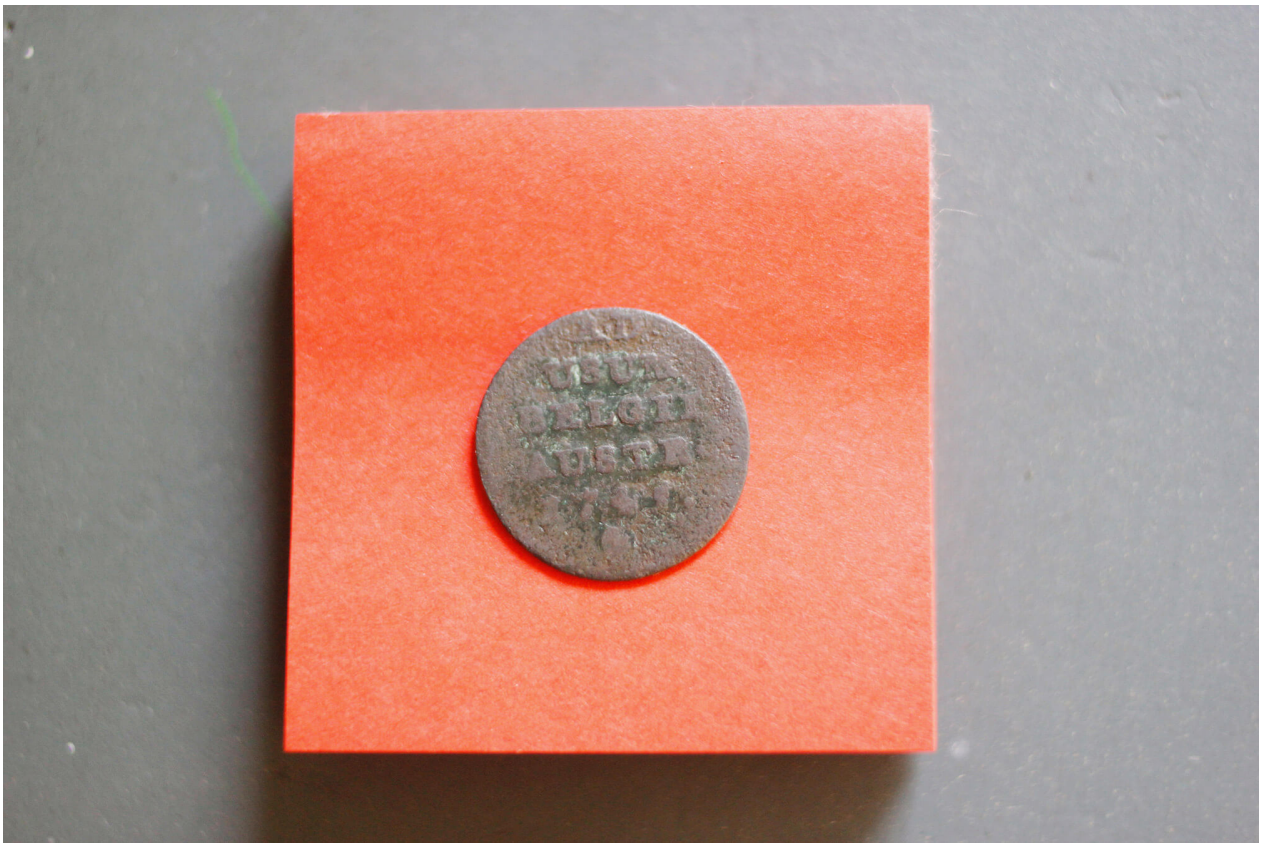

type	date	filename	size	author
photograph	29.07.2021	_MG_6826.JPG; _MG_6825.JPG	6,7MB; 7,7MB	Arnout De Cleene

category
archaeology, economy, family, numismatics, collecting

12:17:33

the-documents.c



Holding two cans of spray paint, a city employee walks through a sweet chestnut grove on the graveyard. He’s looking for potholes.

the-documents.c

Potholes



type	date	filename	size	author
photograph	15.07.2021	IMG_7751.HEIC	4,7 MB	Michiel De Cleene

category
fissure, government, sign, tree

12:17:33

the-documents.c

In his *Handboek Varende Scheepsmodellen* (Handbook Sailing Ship Models) André Veenstra explains the different classes in ship model-competitions. There's a wide variety. For static ship models the most important one is 'truth-to-nature'. A jury compares the model to photographs of the actual ship and brings into account categories such as amount of work, degree of difficulty, scale ratio, construction execution and painting.

The most interesting class – according to Veenstra – is F 6. In this particular class, a number of participants with different boats will form a team. Together, they will perform a certain 'act' with a maximum duration of ten minutes. During the act, they mimic a slice of reality. Such as, for example, 'rescuing' and towing a ship in distress; extinguishing a fire on a tanker or oil rig, lichen and/or tow the sunken wreckage to the harbor, stage a naval battle, etc.

Page 262 shows a photograph of such a mimicked slice of reality. The caption explains: 'Image 14.15. The Dutch demonstration in the F 6 class during the European Championship of 1975: the oil rig is set on fire by a motorboat with terrorists. The fire is extinguished and the oil rig is quickly towed to a safe harbor by tugs. The show was performed by six people and took a very creditable fourth place.'

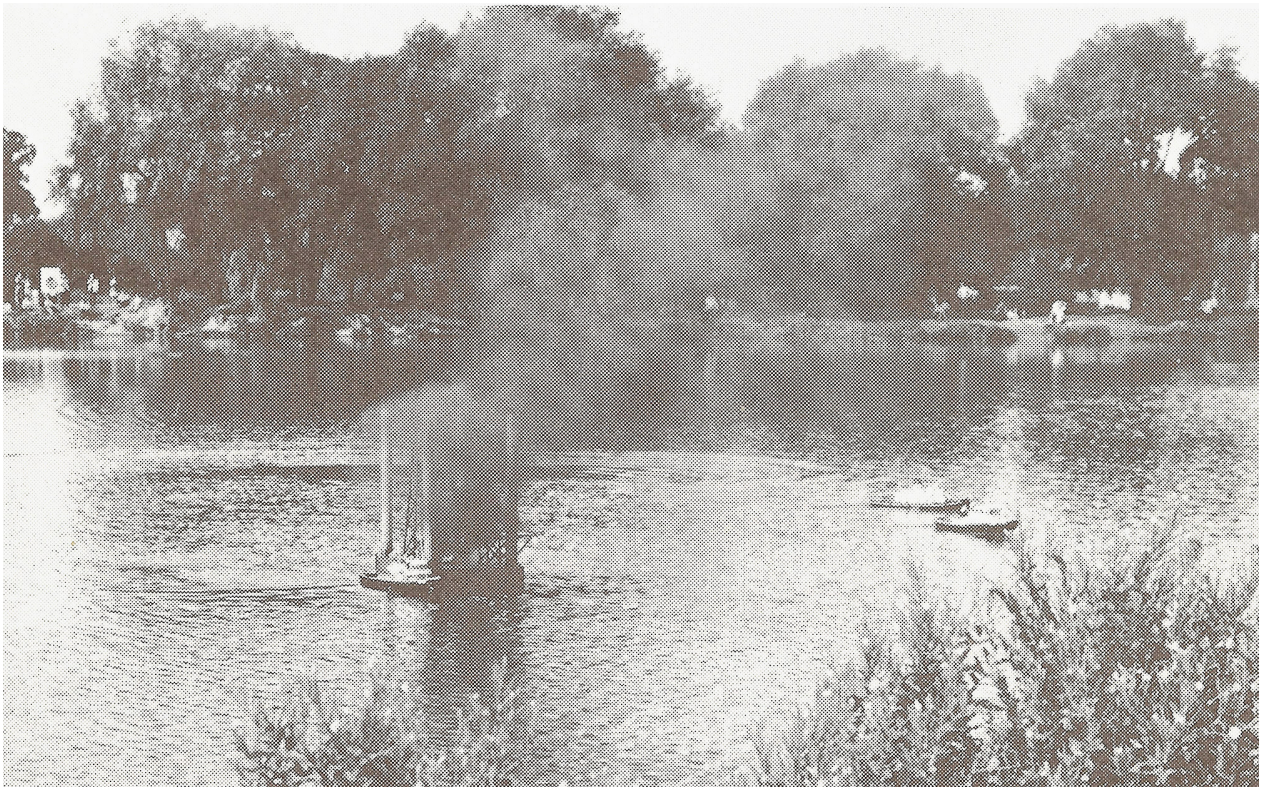

type	date	filename	size	author
scan	22.06.2021	veenstra-b.jpg	20,17 MB	Michiel De Cleene

category
book, landscape, replica/copy, scale, sea

the-documents.c

Until recently, for as long as I could remember, the packaging of Tabasco® Pepper Sauce had been unchanged. On the front of the packaging, there is a photograph of a bottle of Tabasco®, scale 1:1, against an orange background.As far as packaged goods go, this is a highly idiosyncratic and quirky example.

The background colour approximates the colour of the liquid inside the bottle, resulting in as good as no contrast. Moreover, as the image of the bottle is scale 1:1, the packaging becomes kind of unnecessary and superfluous, also because the life-sized image of the bottle is the only way information is given to the customer: there are no additional slogans, no repetition of the brand name, no props and no decor. The image of the bottle advertises the bottle. It seems to add nothing the bottle could not do by its own (like a bottle of wine does).

What makes the packaging truly stand out, however, is the fact that the image of the bottle is not positioned vertically, but is slightly askew. It seems to be the result of a design error, and has an amateur feel to it. The decision to keep it as such and not correct it up until today, is, however, a stroke of genius. The non-vertical positioning alters the relation of the image of the bottle to the bottle inside: as the box is standing on a shelf, the tilted image of the bottle undermines its representational superfluousness.

org Slightly Askew (1)



type	date	filename	size	author
scan	29.03.2021	Document_2021-03-29_111649.jpg	180KB	Arnout De Cleene

category
economy, food, mistake, packaging, replica/copy, scale

12:17:33

the-documents.c

The previous owners of the house we moved into, left us a piece of a newspaper that was used to clad the wall at the time the building was built, and which they found when they renovated the house. The sport-section of the socialist newspaper *Vooruit* is dated 18 November 1931. It features articles on cycling and soccer. Recently, we noticed the plaster is coming off the wall in one corner of the living room. With sufficient rain, it might reveal other events that happened on that 1931 November Wednesday.

Deneef ‘for ever’



4 - Vooruit, 18 Nov. 1931

TELEFOON : 15748

SPORT-EC

WIELRIJDEN

Na ...ef ‘Week-end, Winterbanen

(Vervolg)

...USSEL HAD MEN EEN ...NIG BEGEESTEREND PANACHE-NUMMER

Voor het jongste «week-end»-program- ... had master Pascal in de halve-fond ... de zuivere snelheid voorzien, doch ...ts de deelname van enkele gekende ...cialisten was de gewenschte geest- ...t niettemin bepaald zoek.

... de zuivere snelheid ontdeed Poeske ...rens zich heel gemakkelijk van Ber- ...ni en Ariet, wat trouwens niemand ...erwonderd hebben en tegenover ... kampioen van Frankrijk, Lucien ...eux, wist hij zijn zege in den ... Prijs van den Wapenstilstand ... met veel klank te bevestigen, ...och een veelbeteekenende pres-

... grooten Brusselschen hout- ... Faucheux zich flink verde- ...e «Poes» moest een dier on- ...are eindrushen voordisschen ...n een «niet» te kunnen win- ...ering verschil kan in niets ... van dit nieuw sukses be- ... daar de «Poes» de leiding ...nschman liet bij de bel en ...ugge «remonte» moest doen ...n buitenkant te komen ... was zuiver kunstwerk «à

...niet eens tot een hevig ...en, waardoor Pascal er ...id moet van overtuigd ...tgenoemde aan de ge- ...happen mangelt.

...d achter motoren was ...obert Grassin de on- ... der planken, zoo- ...aren terecht word-

...ks zonder oo...

De zes-dagen van Stuttgart

CHARLIER-DENEEF AAN DE LEIDING

In het verder verloop van den nacht van Zondag op Maandag werd de koppeling Rausch-Hurtgen zwaar gehandikapeerd door een val van eerstgenoemde, waarbij ze meerdere ronden verloren.

Na de klassieke kalmte der morgenuren kwam Rausch met enkele schrammen aan het hoofd zijn plaats hernemen en tijdens de sprintenreeks van het middaguur kwam hij zelfs een aanval inzetten, waarbij de ronden verlies alras werden goedgemaakt.

Opgave van P. Van Kempen

De namiddaguren zijn daarentegen uiterst kalm en men moet de sprintenreeks van 10 uur afwachten om de eekhoorntjes weer in volle aktie te zien.

De vliegende Hollander Piet Van Kempen is de groote bewerker van dezen «corrida» doch de Belgen Charlier-Deneef zijn er de groote helden van en weten zelfs de leiding te veroveren.

Rond 11 uur komt Van Kempen koo... zwaar met de planken in aanraking ... moet ter verzorging naar zijn kabien overgebracht worden. De Hollander, die daarbij zwaar lijdend is aan de maag verkiest daarbij te laten, wat een zekere teleurstelling teweeg brengt onder de toeschouwers.

Deneef «for ever»

Kort vóór middernacht wordt er een groote premie aangekondigd over 5 sprinten en de Waassche hazewind pro...eert ervan om deze goed afgeteekend ...nen.

Charlier rijdt ... beter ...

VOETBAL

Nationale Kompetitie

...RP WE... ...DE LEIDING, DOCH KORT OP ...ELEN G... —LYRA EN RAC. BRUSSEL ALL...N WEG. ...ELE ELFTALLEN TERUG OP DREEF.

NABETRACHTINGEN

ALGEME... GEVO...

De r... wat d... ven... ...

...wen... ren... gewo... opnieuw... alleen. ... voegen bij ... werpenaars ... ring.

Wanneer m... stand der elf... het akute va... ...o. Tien el... ...reik van...

afstand van 4 punten, zoodat beide teams, Lyra en Rac. Brussel, die vorig seizoen de deur naar eere-klasse fataal voor zich zagen toeslaan, dit jaar geen erbarmen willen kennen.

Algemeen is dit seizoen ook Rac. Tienen tegen gevallen. Men was met ...t team zoo hoog opgeloopen dat bij ... vorige kampioenschappen zoo uitstekend figuur sloeg in bevordering en nu blijkt de ploeg nauw op dreef. Weliswaar zijn er eenige teams uit de oudeerste klasse als mededingers in het veld getreden, maar S. C. Charleroi, Seraing en Stade Leuven presteerden tot ...er toe toch wat beter dan de suikerkers.

...n slotte hebben elftallen als ... Luik, Montegnée, Tilleur, Verviers, ... oud gekenden in eere-klasse, bitteinig gepresteerd en valt het te be... ...en of ze nog dit jaar Rac. Brus... ...rdege zullen kunnen verontrusten ... opmarsch naar den kampioensti...

IN EERE-AFDEELING

...RING—CLUB MECHELEN. — Da... ...eft eenieder verwonderd door zijn ... ook de Clubmen kregen er geen ...en moesten er tegen het onder...

B...

Hedenavond te 8 uur

Gustaaf Roth ver... welterkroon tege...

OOK FRAN...

De Brussel... worden hedens... der Louis Bert... uitgenoodigd, ... stellig den slec... organisatie va... Pierre Charles—...

Er worden ons... pen aangeboden, ... tijen vermaarde ... wen brengen, de ... men waarborgen.

Het officieel kampio... ropa voor de welterge... schen den sinjoor Gust... challenger Huizenaar ... Nederland, moet ... fijnproevers.

Roth, wiens ... Scillie gisterav... kampioen Van K... lichtgewichtkroo... sedert een paar ... baren titeldrage... zijn ontelbare c... ting ging bekam... Huizenaar, die z... ongenaakbaar wis... beter lot zal ... Nekolny, Holdt, Bo... We zien dus Roth, ... staand technisch ... afgeteekende punten...

type	date	filename	size	author
scan	20.02.2021	Document_2021-02-20_133700.jpg	1,7MB	Arnout De Cleene

category

archaeology, architecture, fissure, decoration, house, precipitation

12:17:33

On Wednesday, May 9, 2018 at 2:23:14 PM Koh Elaine starts the thread *original or original copy* on the The Free Dictionary by Farlex's forum.

> 'Is "original copy" correct or should it be "original"? Thanks.'

The seventh reply to Elaine's question is Wilmar's on Thursday (his was preceded by towan52, georgew, NKM, Koh Elaine, Sarrriesfan, ChrisKC, Ashwin Joshi).

> 'An original copy IS the original.
>
> Folks usually call the document first created the original, but some will say original copy. If I run that original thru the copy machine, I end up with two copies (yes, I said copies) of the same thing – the original and the duplicate of it (in terms of content). This is how the term is commonly used.
>
> If your writing or conversation depends heavily on understand the difference, I would recommend using the terms original and duplicates. There are many times when that is very important, in that the original must be retained by a particular party, and the duplicates are marked as such and distributed or stored as required depending on the document and the circumstance.
>
> If you are just trying to make sure that you have enough copies to distribute to everyone at the company meeting this afternoon, use whatever terms trips your trigger. But, if you want to ensure that you keep custody of the original, so that you can make additional duplicates (copies) when additional people attend, then be more specific about the words you use.
>
> OH, and, please, in the future, include some context with your question. Asking if "word" is correct doesn't go very far in supplying a reasonably useful response.'

Sources

https://forum.thefreedictionary.com/postst182102_original-or-original-copy.aspx

Wilmar (USA) 1M

Rank: Advanced Member

Joined: 6/4/2015
Posts: 5,721
Neurons: 1,278,032
Location: Vinton, Iowa, United States

type	date	filename	size	author
screenshot	16.02.2021	Schermafbeelding 2021-02-16 om 11.08.01.png	45KB	Michiel De Cleene

category
archive, mistake, replica/copy, technology

12:17:33

the-documents.c

During the one day course *Safety and Avalanches*, teacher G.T. shows pictures of different manifestations of snow and ice. If one learns to read them, one can deduce the wind direction when hiking or skiing in mountainous terrain.
Wind direction is crucial for assessing the stability of the snow. G.T.'s examples are of Austrian origin. He speaks about 'Anraum': displaced snow can get stacked horizontally against an object, such as a tree or a cross. The snow 'grows and builds into the wind'. Counter-intuitively, the snow points to the side the wind is coming from. One can expect dangerous terrain in the direction of the 'unbuilt' side of the object.



type	date	filename	size	author
photograph	14.02.2021	810px-Raureif_im_Bayerischen_Wald.JPG	262KB	Arnout De Cleene

category
manual, mistake, precipitation, tree, wind, sign

12:17:33

The paths in the valley of the Bayehon are covered with ice. We are making our way down towards the valley of the Ghâster. The temperature is minus 15 degrees Celsius. The water in our drinking bottles is frozen. We are betting on the shelter indicated on the map (*Au Pied des Fagnes, Carte De Promenades,* 1:25.000, Institut Geographique National) to pitch our tent. There is almost no wind, but every breath of air feels like we're being hit with a thousand needles. What the map indicates as a shelter appears to be a picnic table.

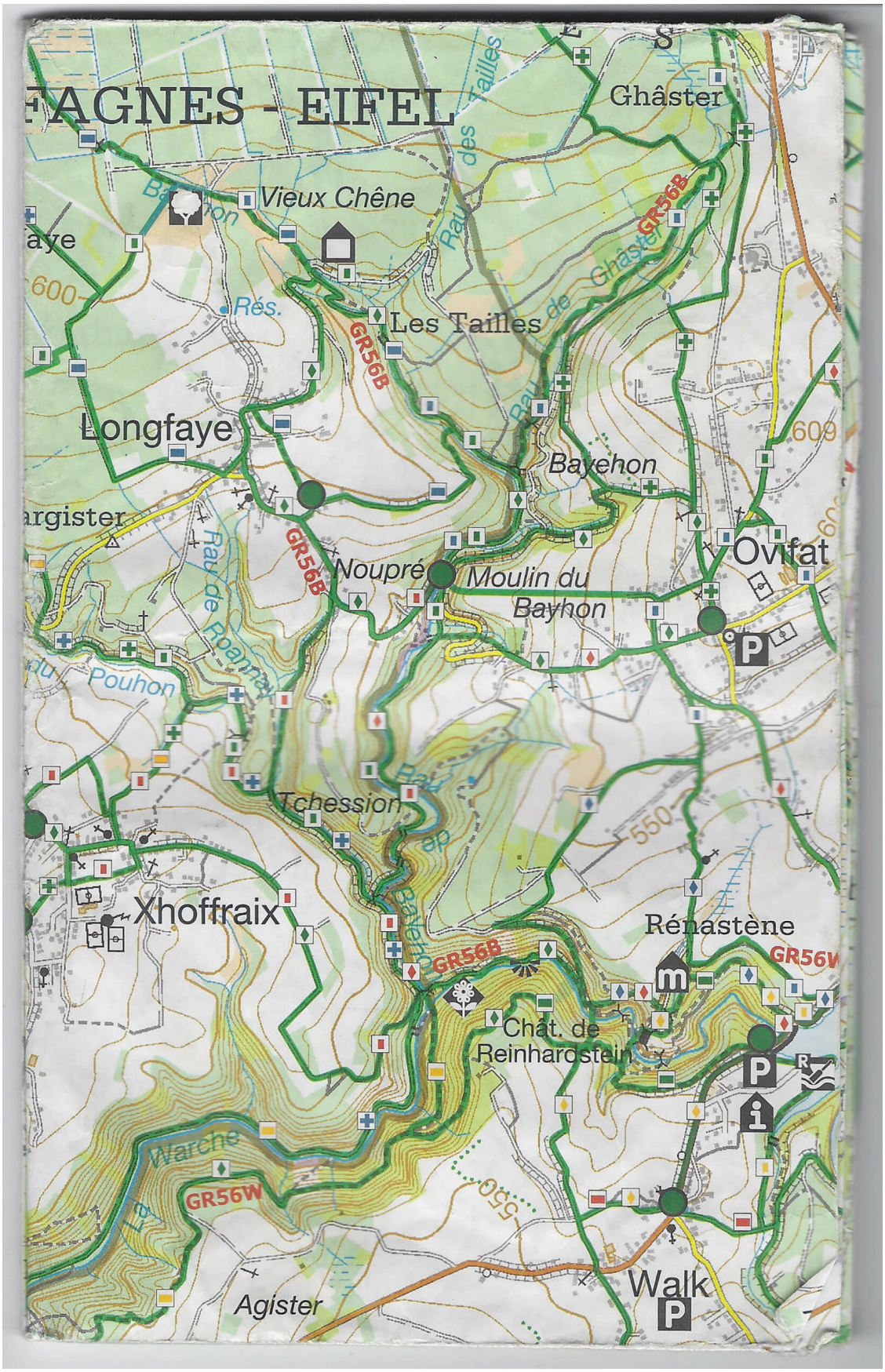

type	date	filename	size	author
scan	14.02.2021	Handgeschreven_2021-02-14_142153.jpg	2,1MB	Arnout De Cleene

category
map/plan, mistake, scale, sign, wind, precipitation

12:17:33

Belgium, approximately 1.5km from the French border, photograph made on 16.06.2018.

the-documents.c

The European flag symbolises both the European Union and, more broadly, the identity and unity of Europe. It features a circle of 12 gold stars on a blue background. They stand for the ideals of unity, solidarity and harmony among the peoples of Europe. The number of stars has nothing to do with the number of member countries, though the circle is a symbol of unity.[1]

1. Coat of arms of Gmina Puck, a rural district in Puck County, Pomeranian Voivodeship, in northern Poland.
2. Illegible.
3. F.C. Hansa, Mecklenburg, Pommern, FC Hansa Rostock is a German association football club based in the city of Rostock, Mecklenburg-Vorpommern. They have emerged as one of the most successful clubs from the former East Germany and have made several appearances in the top-flight Bundesliga. Hansa Rostock's official anthem is "FC Hansa, wir lieben Dich total". Hansa struggles with hooliganism, estimating up to 500 supporters to be leaning towards violence. The club's logo consists of a red sailing ship with a blue sail showing the Rostock Griffin.
4. Mon École Écologique.org is an organization for environmental conservation. On 07.01.2021 there was no website listed on this URL.
5. Illegible.
6. Illegible, apart from '1962' in the middle.
7. Innocenti Bruderschaft, EL, 2018, a community of German Lambretta Innocenti riders and aficionados.
8. Imag'Ink, Bretignolles Sur Mer, Tatoueur, 06 06 44 13 51, a French tattoo shop.
9. Illegible.
10. Hardly legible, the only word that can be made out is 'Futbolom': Russian for soccer.
11. Kaluga on tour. Kaluga is a Russian city 150km southwest of Moscow. It is often called the cradle of space exploration thanks to the city's most famous resident: Konstantin Tsiolkovsky.
12. Hansa Ultras, F.C. Hansa. The Ultras are a group of F.C. Hansa fans (see: '3').
13. Illegible because '12' was stuck over it.
14. Illegible.
15. La Hutoise is a regional student-association for higher education students from the Belgian town of Huy and its surroundings. Its aim is to bring together students from Huy in a spirit of camaraderie and to perpetuate student folklore. The logo consists of a two headed bird of prey with a cap on each head. The bird wears a scarf over one shoulder and holds a glass of beer in each paw.
16. F.C. Hansa, Grimmen. The F.C. Hansa logo (see '3' and '12') is combined with the coat of arms of Grimmen: a griffin on a pile of 10 bricks. Grimmen is a German town in Nordvorpommern on the banks of the river Trebel.
17. Illegible.
18. Heil Hansa. To the left of this text the F.C. Hansa logo (see '3', '12' and '16'), on the right a logo consisting of a black bull with his tongue out and a golden crown on his head.
    This controversial sticker lead to several arrests in the run-up to the match between F.C. Hansa Rostock and Bayern München in February 2020. Supporters of F.C. Hansa had attached this sticker to public buildings on their way to the stadium.
19. Illegible because '16' was stuck over it.
20. The Cuban flag.
21. Illegible.
22. Illegible.
23. Kaluga (see '11').
24. De Veterinnen, a round, black sticker with a red print of a head wearing a round hat and a carnivalesque collar with a carrot for a nose. No further information found.
25. Zlombol 11. Zěombol is a yearly charity car rally racing event that starts in Katowice Poland. Contesters must drive a car that was built or designed during the communist era. The destination of the 2011 edition was Loch Ness.
26. F.C. Hansa, Mecklenburg, Pommern, identical sticker to '3', see also '12', '16', and '18'.
27. Torpedo Moscow, only for white. Football club Torpedo Moscow is a Russian professional club based in Moscow, founded in 1930. Some fans of the club wave far-right symbols and banners, both during and outside of matches. Massive fan-protest ensued when the club tried to sign a black player in 2018. The player's contract was cancelled.
28. Heil Hansa. See '3', '12', '16', '18' and '26'.
29. Illegible.
30. Illegible.
31. Illegible.
32. Illegible.

Sources

1 https://europa.eu/european-union/about-eu/symbols/flag_en

Border



type	date	filename	size	author
photograph	20.01.2021	_44A2787.dng	52,4MB	Michiel De Cleene

category
animal, automobile, brick, parking, sign, sticker

12:17:34

the-documents.c

33. F.C. Hansa. Variation of ‘3’ and ‘26’ with a circle of yellow crops around the logo. See also ‘12’, ‘16’, ‘18’ and ‘28’.
34. Live animals, contents: Rivne UA. These stickers are required by the International Air Transport Association for airline cargo pet travel. Rivne is a city in western Ukraine (UA) with an international airport. The sticker does not specify the transported animal but displays a dog, two birds, two fish and a turtle.
35. Illegible.
36. Illegible.
37. Illegible.
38. Illegible, apart from ‘lska’ on the bottom.
39. Norrland Fly Guys, Reading Water. The sticker displays a minimal landscape with two pine trees, and a shed on a chunk of floating ice, a single four-point star shines in the sky. Norrland is the northernmost part of Sweden. No further information found. Whether the ‘fly guys’ own airplanes or are involved in fly fishing is unclear.
40. This sticker displays – what appears to be – a smiling potato in front of an enlarged snow crystal. No further information found.
41. Traumsucht is an artist collective from Berlin. Their website lists German rap-artists
42. Illegible.

org Border



12:17:34

Yesterday I had my shoulder checked by a radiologist. He took an ultrasound and saw some minor inflammation of my right subscapularis.
After giving me some advice – ‘we could give you a shot of cortisone in the shoulder. It would relieve you from your pain for six weeks and then, without proper exercise, you’d be back where you are now’– he walked towards the door. ‘I propose you do this exercise thirty times, three times a day.’
The radiologists put his right hand on the doorframe, his arm stretched, the weight of his body on it and then leaned forward and back again, while keeping his arm stretched. ‘This will increase the muscles around the sore subscapularis. It will take months.’ After giving me his advice, he sent me back into the dressing room. I put my shirt back on and went into the waiting room. The nurse called out my name, charged me 14,00 EUR and gave me a card. ‘This code will allow you to look at the images of the ultrasound at home’, she said.

Today I entered the code and password and – instead of my shoulder – found the röntgen-images of someone else’s broken heel.

org Shoulder



type	date	filename	size	author
radiograph	14.01.2021	1f713c4c-6975-4760-ada1-9cc485930adc.PNG	1,2MB	Michiel De Cleene

category
data storage, mistake, medicine, fissure

12:17:35

09:10:00 The frame shows the first movement on the terrain. The gate has been opened, the barrier lowered. A black car is in the back. In the forefront, aviation signs on the ground: a yellow cross on a surface painted red; an arrow in a 90° angular shape; two circles connected by a line; a T-shaped line.

09:20:00 Two men talking, each one on one side of the barrier. The man on the side of the airstrip has two dogs with him. The aviation signs have changed: the arrow is gone; the horizontal bar of the T-symbol has moved to the other side of the vertical line; one yellow line that made up the cross on the red surface is gone, leaving one yellow diagonal line.

10:09:01 A small white aircraft (the two men and the dogs are gone).

10:20:01 The aircraft in the same position, with what seems to be an open roof.

10:40:00 Aircraft leaving the gas station where it was before.

11:10:01 A white car at the gas station, where previously the aircraft was stationed; a silhouette of a man, perhaps.

11:30:01 White car gone.

11:50:01 Small white aircraft at the gas station; man in red jacket next to the aircraft. Not clear if it is the same aircraft seen in frame 10:09:01.

12:10:01 Aircraft appears to be heading for take-off.

12:20:01 Aircraft gone.

12:40:01 White dots on the grass that appear to be birds.

14:10:00 First precipitation: snow, visibility lessens.

14:20:00 More snow, wind is stronger; someone has replaced the yellow stripe so that, again, a yellow cross is formed on the red background.

15:10:00 The grass and the concrete get increasingly white. No aircrafts, vehicles or persons can be discerned. The aviation signs beneath the thin-layered snow are still visible, and unaltered.

Notes

Every so often architects ask me to photograph projects of theirs under a blanket of snow. Snow-days are rare around here. In an attempt to avoid a futile drive along roads in winter conditions, I check webcams near the project-to-be-photographed before setting out.

Sources

- Webcam Grimbergen, meteobelgie.be: https://www.meteobelgie.be/waarnemingen/belgie/webcam/272/grimbergen
- http://www.rvg.be

The Events That Took Place in Grimbergen

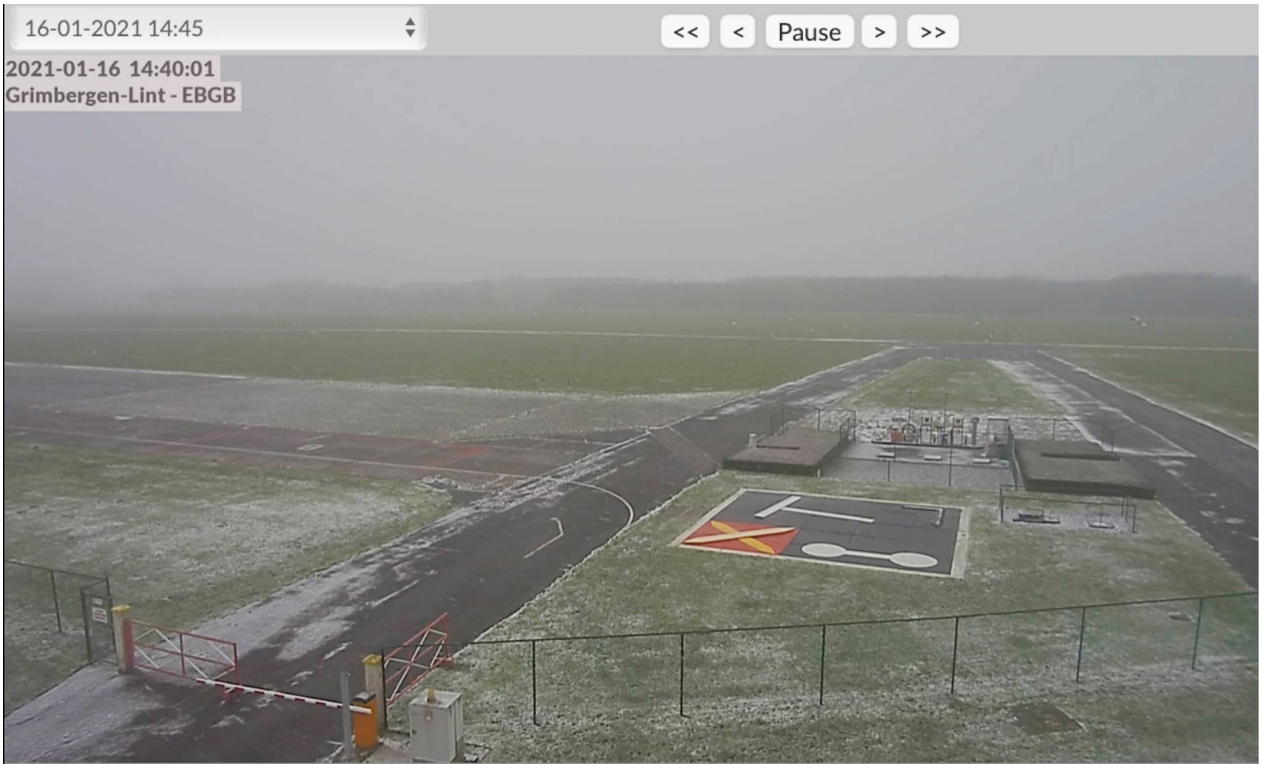

type	date	filename	size	author
video	06.01.2021	Schermopname 2021-01-06 om 15.35.57.mov	4,4MB	De Cleene De Cleene

category
animal, architecture, automobile, precipitation, sign, wind

12:17:35

Due to strict regulations during the COVD-19-pandemic, the yearly vehicle inspection had to be scheduled by appointment. Getting ready to drive to the DMV, the car wouldn't start. It had rained heavily, the preceding days. The day before the DMV-appointment, water had come running into the car on pushing the pedals. My socks were wet.

I called the DMV to say I needed to cancel the appointment and make a new one (but that the car, besides not being able to drive, was perfectly fine, vehicle-inspection-wise).

Later that day, we got the engine up and running again, using jumper cables and a second car, so we would be able to drive to meet the midwife the next day.

Sources

Renault Clio. Instructieboekje. 2012. PDF-file

ACCU: storing (4/4)

Starten met starthulpkabels

Sluit de starthulpkabels als volgt aan tussen de twee auto's:

Controleer of de starthulpkabels, verkrijgbaar bij uw merkdealer, dik genoeg zijn en in goede staat verkeren.

Beide accu's moeten dezelfde spanning hebben: 12 volt. De hulpaccu moet minstens de capaciteit (Ampère-uur, Ah) hebben van de ontladen accu.

Let erop dat de auto's elkaar niet raken (kortsluitingsgevaar als u de pluspolen met elkaar verbindt) en dat de ontladen accu goed aangesloten is. Zet het contact af van uw auto.

Laat de motor van de hulpauto met een middelmatig toerental draaien.

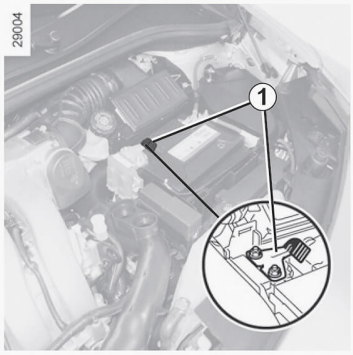

Sluit de positieve kabel ***A*** op de **steun *1*** op de **pluspool *2*** (+) van de ontladen accu aan en daarna op de **pluspool *3*** (+) van de hulpaccu.

Sluit de negatieve kabel ***B*** aan op de **minpool *4*** (–) van de hulpaccu en daarna op de **minpool *5*** (–) van de ontladen accu.

Sluit de kabels A en B uitsluitend aan op de aangegeven aansluitingen.

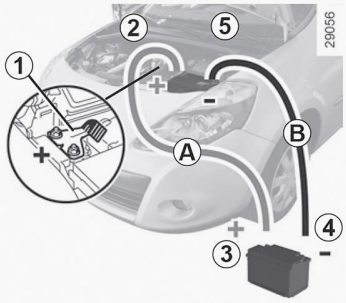

Start de motor op de normale wijze. Maak, zodra hij draait, de kabels ***A*** en ***B*** in omgekeerde volgorde **(*5-4-3-2*)** los.

Controleer of de kabels ***A*** en ***B*** elkaar nergens raken en of de positieve kabel ***A*** geen metalen delen van de hulpauto raakt.

Risico van letsel en/of beschadiging van de auto.

type	date	filename	size	author
screenshot	30.12.2020	Schermafbeelding 2020-12-30 om 20.40.39.png	954KB	Arnout De Cleene

category
automobile, crash, epidemic, precipitation, technology, government

12:17:36

Depending on the language one chooses, the Wikipedia entry for ‘document’ shows a different picture. The French-language page shows what appears to be a Slovenian thesis written in 1984. The caption states it is a ‘book of Czechoslovak computer science author Květoslav Šoustal about computer networks’. The image was uploaded by Kelovy, a Slovakian mushroom-picker.

The anonymous hand rests on a lemon-yellow tablecloth, on which a yellow book and a blue binded file lie. The top left corner is the most intriguing, however: the tablecloth seems to be draped over a lemon, alongside a drinking glass. The cloth, however, does not get shaped by the lemon. Nor does the shadow-side of the lemon coincide with the shadow the other documents throw on the tablecloth. A closer look seems to indicate that the lemon is in fact an image of a lemon, printed on a plastic napkin.

The Russian wikipedia shows the image of a lease agreement. The German wikipedia for ‘document’ is text only.

Sources

https://fr.wikipedia.org/wiki/Document#/media/Fichier:KVETOSLAV_SOUSTAL_BOOK.JPG, created October 3, 2006 / original in original: paper, 1984

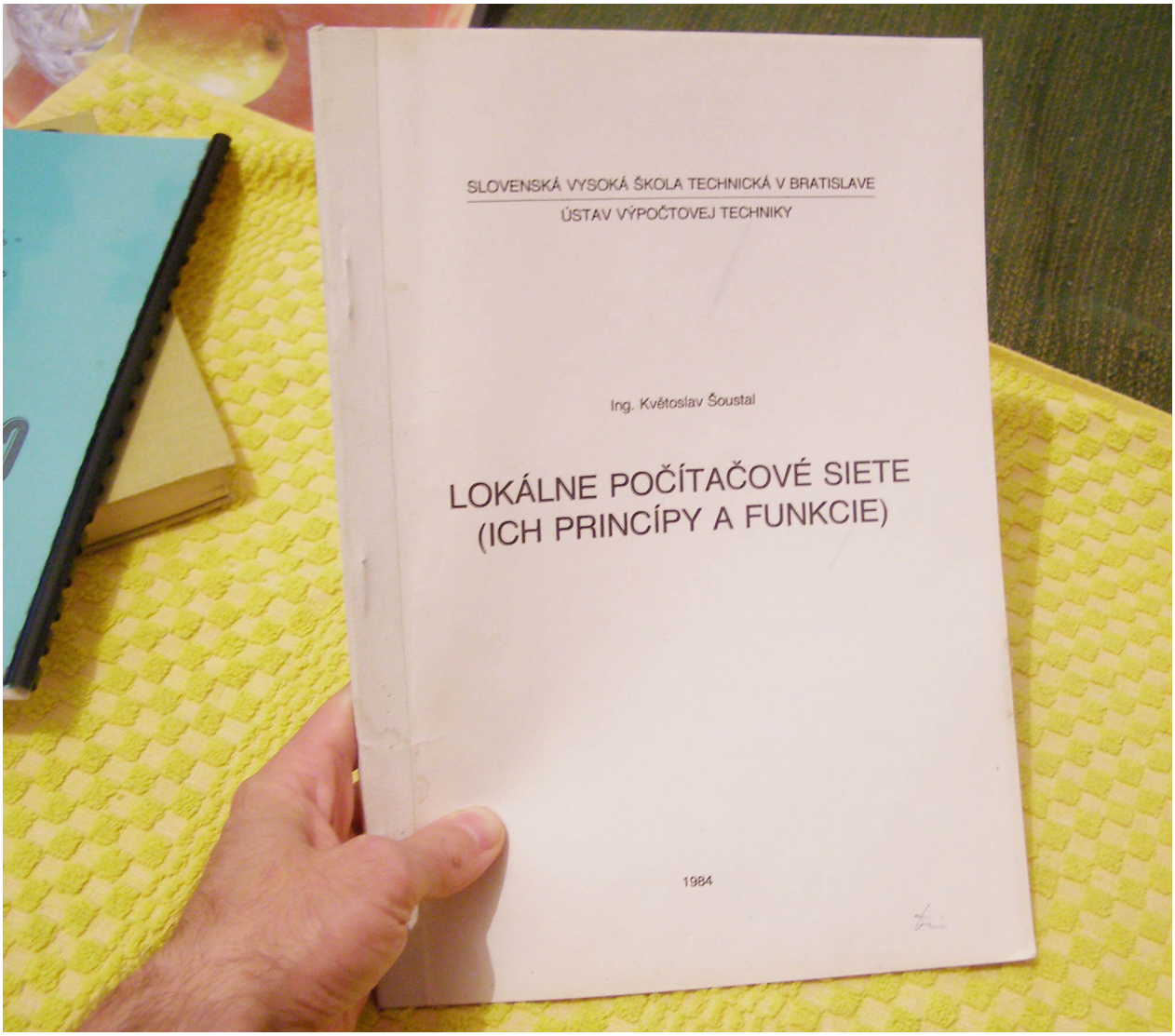

type	date	filename	size	author
photograph	23.12.2020	KVETOSLAV_SOUSTAL_BOOK.JPG	956KB	Arnout De Cleene

category
book, encyclopaedia, fruit, food, trompe l'oeil, cloth, manual, technology

12:17:36

The Bahrain Formula 1 Grand Prix takes place every year since the track's inauguration in 2004 – except for 2011 when the race was cancelled due to protests in the wake of the Arab Spring. To prevent sand from covering the track and entering the air-ducts and engines, the sand near the track is sprayed with an adhesive to keep it from blowing around.

The cloud of sand in the picture (made near Avenue 61 on an artificial island close to Seef) was made by kicking it into the frame while M.R. and M.D.C. had to stop and wait for a truck that was being towed after the driver lost control over the vehicle and flipped it onto its side. Days earlier M.D.C. had tried to make a photograph of the F1-track, but couldn't get close enough to make a decent picture.

Adhesive



type	date	filename	size	author
photograph	18.12.2020	_44A7884.dng	58,4MB	Michiel De Cleene

category
automobile, Bahrain, crash, drought, sand, trompe l'oeil

12:17:37

the-documents.c

On the second to last evening before we head home, we go for dinner at Suzanne’s house. She has invited a friend, a national deputy for the region where she grew up. We eat fish and *patates douces*. We drink beer. The deputy’s secretaries – there are three of them – closely inspect the worn manuscript we hand them. In blue ink: proverbs of their region, written by my girlfriend’s grandfather in local Kikongo language. In red: a Dutch translation. They laugh. A month later, the deputy will become Vice-minister of Internal affairs. The proverbs get marked by fresh grease stains.



type	date	filename	size	author
scan	15.12.2020	Mai Ndombe.jpg	922KB	Arnout De Cleene

category
RDC, food, house, card, government